CHEMICAL ENGINEERING 2O04 - Assignment #1

QUESTION 1 (from 2025 Midterm #1)

Given the viscosity and temperature data for SAE 15W-40 engine oil in the table below, calculate the temperature (K) at which the viscosity of SAE 15W-40 engine oil is equal to 30% of its value at 303 K.

Temperature (K)	Viscosity (Pa·s)
283	0.583
303	0.155

From slide 14 of the PDF_01 notes:

$\mu = Ce^{b/T}$

If we solve for constants C and b, we can calculate the viscosity at any temperature!

Substitute in the values from the table above:

Equation 1 $\quad 0.583 = Ce^{b/283}$

Equation 2 $\quad 0.155 = Ce^{b/303}$

Divide Equation 1 by Equation 2

$$\frac{0.583}{0.155} = \frac{Ce^{b/283}}{Ce^{b/303}}$$

$$\frac{0.583}{0.155} = e^{(b/283 - b/303)}$$

$$ln\left(\frac{0.583}{0.155}\right) = b\left(1/283 - 1/303\right)$$

$$b = \frac{ln\left(\frac{0.583}{0.155}\right)}{\left(1/283 - 1/303\right)}$$

$$b = 5679.8\ K$$

Solve for C using Equation 1

$$0.583 = Ce^{5679.8/283}$$

$$C = \frac{0.583}{e^{5679.8/283}}$$

$$C = 1.12 \times 10^{-9} Pa \cdot s$$

Now we can calculate the temperature at which $\mu = 0.3 * 0.155 = 0.0465 Pa \cdot s$

$$0.0465 = 1.12 \times 10^{-9} e^{5679.8/T}$$

$$ln\left(\frac{0.0465}{1.12 \times 10^{-9}}\right) = \frac{5679.8}{T}$$

$$17.541 = \frac{5679.8}{T}$$

$$\boxed{T = 323.8K}$$

QUESTION 2

a. On the third page of this assignment there is a table of measurements of viscosity of helium gas over the temperature range of 22 to 112 °C – note that the data are also posted on Avenue in a text document. Using Excel, create a nice plot of viscosity (Pa*s) versus temperature (°C) for helium gas.

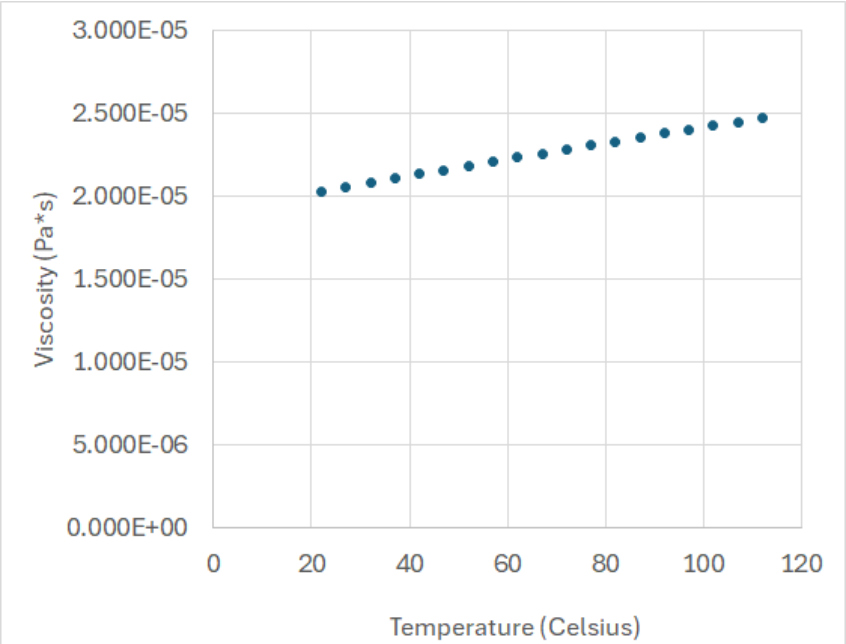

b. A colleague suggests using a simple linear regression model to capture the effect of temperature on viscosity of helium. Using the strategies presented in Tutorial 2, prove that this suggestion is NOT a good one.

SUMMARY OUTPUT

Regression Statistics	
Multiple R	0.999842138
R Square	0.999684302
Adjusted R Square	0.999665731
Standard Error	2.51384E-08
Observations	19

ANOVA

	df	*SS*	*MS*	*F*	*Significance F*
Regression	1	3.40185E-11	3.40185E-11	53831.8874	3.34355E-31
Residual	17	1.0743E-14	6.3194E-16		
Total	18	3.40293E-11			

	Coefficients	*Standard Error*	*t Stat*	*P-value*	*Lower 95%*	*Upper 95%*	*Lower 95.0%*	*Upper 95.0%*
Intercept	1.92411E-05	1.52424E-08	1262.339197	1.045E-43	1.9209E-05	1.92733E-05	1.9209E-05	1.92733E-05
X Variable 1	4.88596E-08	2.10587E-10	232.0169981	3.34355E-31	4.84154E-08	4.93039E-08	4.84154E-08	4.93039E-08

RESIDUAL OUTPUT

Observation	*Predicted Y*	*Residuals*
1	2.03161E-05	-4.60526E-08
2	2.05604E-05	-3.03509E-08
3	2.08046E-05	-1.46491E-08
4	2.10489E-05	-8.94737E-09
5	2.12932E-05	6.75439E-09
6	2.15375E-05	1.24561E-08
7	2.17818E-05	1.81579E-08
8	2.20261E-05	2.38596E-08
9	2.22704E-05	2.95614E-08
10	2.25147E-05	2.52632E-08
11	2.2759E-05	2.09649E-08
12	2.30033E-05	2.66667E-08
13	2.32476E-05	2.23684E-08
14	2.34919E-05	8.07018E-09
15	2.37362E-05	3.77193E-09
16	2.39805E-05	-1.05263E-08
17	2.42248E-05	-1.48246E-08
18	2.44691E-05	-2.91228E-08
19	2.47134E-05	-4.34211E-08

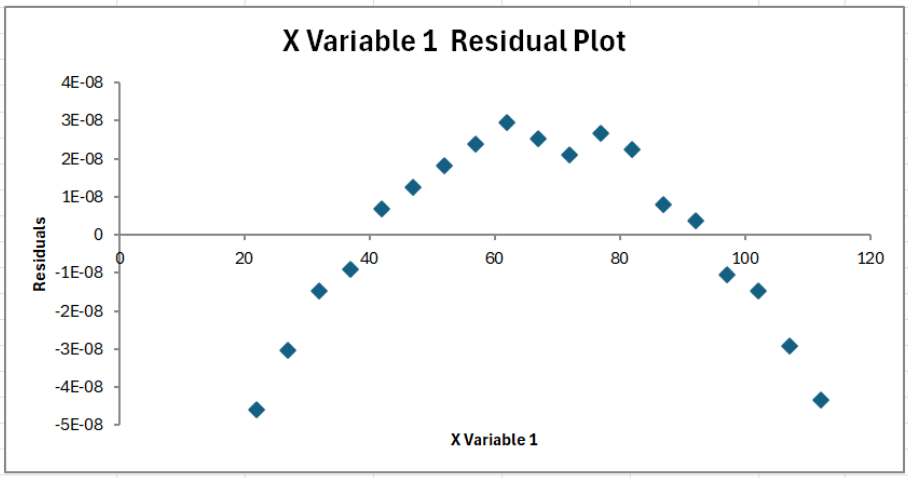

Since the residuals are NOT randomly dispersed about the horizontal line, a linear regression model is NOT appropriate.

c. On slide 23 of the PDF_01 notes, we gave you the following form of the Sutherland correlation developed for capturing temperature effects on gas viscosity:

$$\mu = \frac{bT^{1/2}}{1 + {}^{S}/_{T}}$$

where b and S are empirical constants. Also on that slide, we gave you the following linearized form of the Sutherland correlation:

$$\frac{T^{3/2}}{\mu} = \left(\frac{1}{b}\right)T + \frac{S}{b}$$

From the regression analysis of a plot of $\frac{T^{3/2}}{\mu}$ vs T, report the best-fit values of the empirical constants b and S – be sure to include the appropriate units for both constants.

Need to convert temperatures from Celsius to Kelvin

Temp (oC)	Temp (K)	Visc (Pa*s)	Temp^(3/2)/Visc
22	295.15	2.027E-05	2.50E+08
27	300.15	2.053E-05	2.53E+08
32	305.15	2.079E-05	2.56E+08
37	310.15	2.104E-05	2.60E+08
42	315.15	2.130E-05	2.63E+08
47	320.15	2.155E-05	2.66E+08
52	325.15	2.180E-05	2.69E+08
57	330.15	2.205E-05	2.72E+08
62	335.15	2.230E-05	2.75E+08
67	340.15	2.254E-05	2.78E+08
72	345.15	2.278E-05	2.81E+08
77	350.15	2.303E-05	2.85E+08
82	355.15	2.327E-05	2.88E+08
87	360.15	2.350E-05	2.91E+08
92	365.15	2.374E-05	2.94E+08
97	370.15	2.397E-05	2.97E+08
102	375.15	2.421E-05	3.00E+08
107	380.15	2.444E-05	3.03E+08
112	385.15	2.467E-05	3.06E+08

Then generate ANOVA table for $\frac{T^{3/2}}{\mu}$ vs T:

SUMMARY OUTPUT								
Regression Statistics								
Multiple R	0.99999792							
R Square	0.99999584							
Adjusted R Square	0.999995596							
Standard Error	36894.34528							
Observations	19							
ANOVA								
	df	*SS*	*MS*	*F*	*Significance F*			
Regression	1	5.56297E+15	5.56297E+15	4086831.409	3.48616E-47			
Residual	17	23140276133	1361192714					
Total	18	5.56299E+15						
	Coefficients	*Standard Error*	*t Stat*	*P-value*	*Lower 95%*	*Upper 95%*	*Lower 95.0%*	*Upper 95.0%*
Intercept	65769878.68	105469.2587	623.5928791	1.68142E-38	65547358	65992399.37	65547358	65992399.37
X Variable 1	624806.7848	309.0668143	2021.591306	3.48616E-47	624154.7108	625458.8588	624154.7108	625458.8588

The best-fit value of the slope (=1/b) is 624806; thus $b = 1.60e^{-6}\frac{Pa \cdot s}{K^{1/2}}$

The best-fit value of the intercept (=S/b) is 65769878; thus $S = 105.26K$

d. Use the correlation developed in part C to predict the viscosity (Pa*s) of helium gas at a temperature of 120 °C.

The resulting equation from part c is: $$\mu = \frac{1.60e^{-6} \cdot T^{1/2}}{1+\frac{105.26}{T}}$$

Convert temperature to Kelvin: $T = 120 + 273.15 = 393.15K$

Calculate viscosity at 393.15 K: $$\mu = \frac{1.60e^{-6} \cdot (393.15)^{1/2}}{1+\frac{105.26}{393.15}}$$

$$\boxed{\mu = 2.5e^{-5} Pa \cdot s}$$

e. A colleague suggests using the correlation you developed to predict the viscosity of helium gas at a temperature of 200 °C. What do you think of this idea?

It is NOT recommended to use the correlation developed in Part C because 200 C is well outside the range of temperatures used to fit the empirical constants in the Sutherland Equation.

QUESTION 3

A hydrometer is a simple device used to measure the density of liquids (commonly used in brewing and winemaking to check the alcohol content). It has two connected parts – a glass bulb (weighted with metal) and a cylindrical stem (with some internal scale marks). When placed in a liquid, the hydrometer floats upright with some part of the stem extending above the liquid surface.

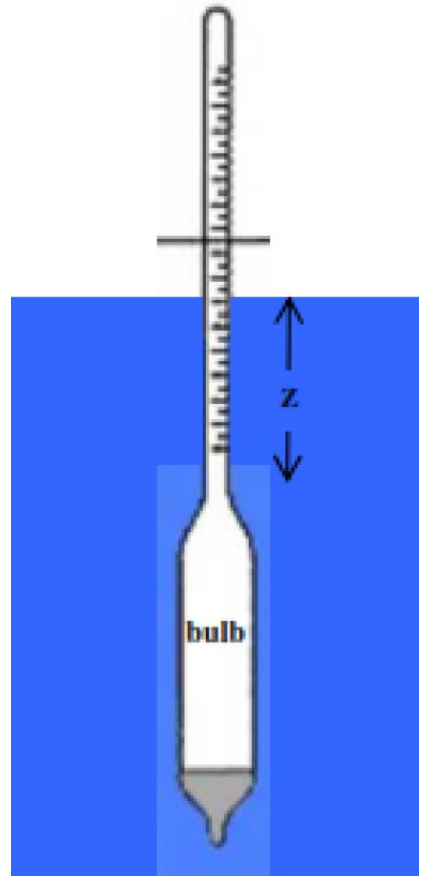

In the figure shown, the bulb has a volume of 25 mL and a total mass (including the metal weight) of 20 g. The cylindrical stem has a diameter of 5 mm and a total length of 20 cm; the mass of the cylindrical stem is 2 g.

a. Using the depth Z, derive an expression for the volume of the hydrometer that is immersed in the liquid.

There are two contributions to the volume submerged (i.e. immersed) in the liquid:

$$\forall_{submerged} = \forall_{bulb} + \forall_{stem}$$

$$\forall_{submerged} = \forall_{bulb} + \frac{\pi}{4} d_{stem}{}^2 Z$$

b. Draw the appropriate force balance diagram for when the hydrometer is stationary in the fluid. Be sure to identify and label all the relevant forces and in which direction they act.

$$F_{buoyancy} = \rho_{liquid} g \forall_{submerged}$$

$$F_{gravity} = m_{hydrometer} g$$

c. When placed in an unknown liquid, the cylindrical stem extends 13.5 cm above the liquid surface. Determine the specific gravity of this liquid.

Equating the two forces:

$$F_{buoyancy} = F_{gravity}$$

$$\rho_{liquid} g \forall_{submerged} = m_{hydrometer} g$$

$$\rho_{liquid} = \frac{m_{hydrometer}}{\forall_{submerged}}$$

$$\rho_{liquid} = \frac{m_{hydrometer}}{\forall_{bulb} + \frac{\pi}{4} d_{stem}{}^2 Z}$$

Given $m_{hydrometer} = 22g;\ d_{stem} = 5mm = 0.5cm;\ \forall_{bulb} = 25\ mL = 25cm^3; Z = 6.5cm$

$$\rho_{liquid} = 0.837\ {}^{g}/_{cm^3}$$

Convert density to specific gravity (SG):

$$\boxed{SG_{liquid} = \frac{\rho_{liquid}}{\rho_{water@4C}} = \frac{0.837\ {}^{g}/_{cm^3}}{1\ {}^{g}/_{cm^3}} = 0.837}$$

QUESTION 4 (from 2024 Midterm #1)

In the accompanying figure, the cross-section of a 3 m wide barge is shown – if the mass of the barge itself is 2,000 kg, calculate the draft (see accompanying figure for physical interpretation) when a 25,000 kg load is put inside the hold of the barge.

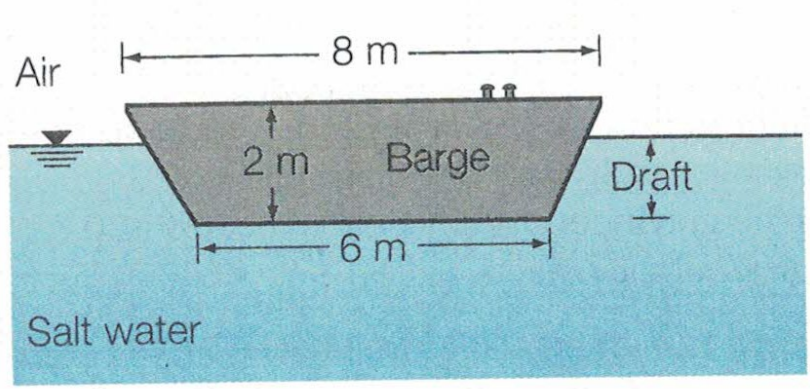

NOTE: The barge is essentially completely open on the inside and thus the buoyancy for the portion above the seawater surface is negligible.

Force balance diagram for when the barge is stationary:

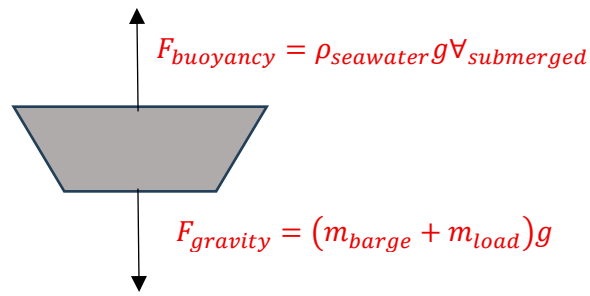

Equating the two forces:

$$F_{buoyancy} = F_{gravity}$$
$$\rho_{seawater} g \forall_{submerged} = (m_{barge} + m_{load})g$$
$$\forall_{submerged} = \frac{(m_{barge} + m_{load})}{\rho_{seawater}}$$
$$\forall_{submerged} = \frac{27000kg}{1025\, {}^{kg}/_{m^3}}$$
$$\forall_{submerged} = 26.34m^3$$

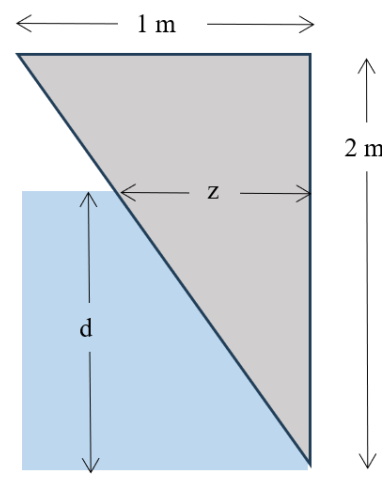

Now determine the draft (d) from given dimensions of the barge:

By properties of similar triangles: $\frac{1}{2} = \frac{z}{d}$

Since the barge is 3 m wide, the resulting formula for submerged volume is:

$$\forall_{submerged} = 18d + \frac{3}{2}d^2$$

By substitution of the value from the force balance:

$$26.34 = 18d + \frac{3}{2}d^2$$

or

$$d^2 + 12d - 17.56 = 0$$

Using the general solution for quadratic equation: $\boxed{d = 1.32 \text{ m}}$